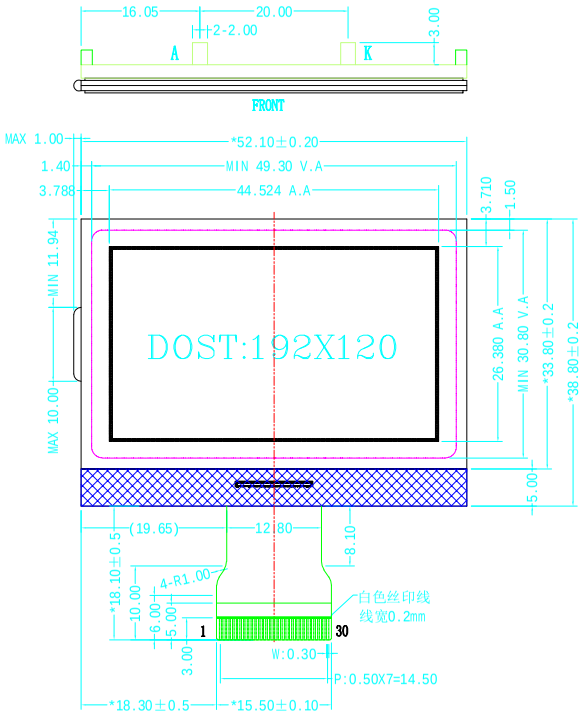

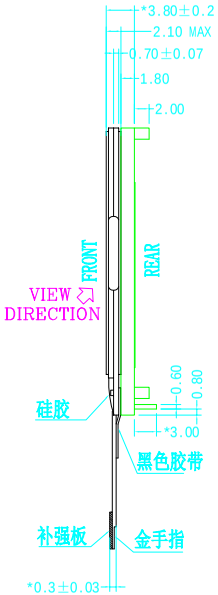

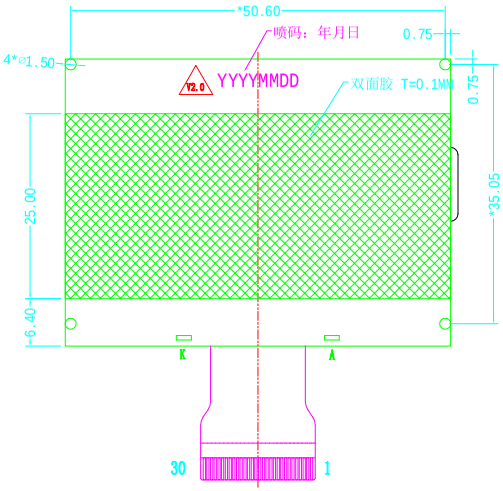

NO.	PIN
1	NC
2	NC
3	NC
4	NC
5	NC
6	VM
7	VG
8	V0
9	XV0
10	CA1P
11	CA1N
12	VDD
13	VDD
14	VSS
15	VSS
16	CSB
17	A0
18	RSTB
19	SCL
20	SDA
21	NC
22	EXTB
23	NC
24	NC
25	VPP
26	VPP
27	NC
28	NC
29	NC
30	NC

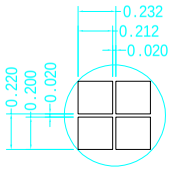

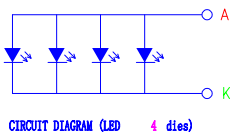

CIRCUIT DIAGRAM (LED 4 dies)

LOGIC ROUTING:

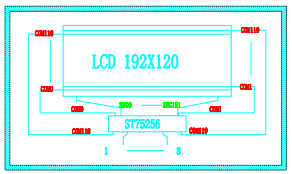

NOTES:

1. DISPLAY TYPE: FSTN
2. POLARIZER TYPE: TRANSFLECTIVE,POSITIVE
3. VIEW DIRECTION: 6:00
4. OPREATING TEMPERATURE: −20°C~+70°C
5. STORAGE TEMPERATURE: −30°C~+80°C
6. VDD: +3.3V
7. DRIVE METHOD: 1/120DUTY,1/11BIAS
8. CONTROLLER: ST75256
9. BACKLIGHT TYPE: WHITE
10. BACKLIGHT SUPPLY VOLTAGE: 3.0V

WAYING (HONGKONG) SHARES LIMITED		
DESIGN:	MODEL NUMBER: WYM192120K1G	UNITS: MM
CHECK:		VERSION: A
APPOVE:		SHEET: 1 OF 1
Unspecified tolerences are ±0.3		DATE: 2020-03-12