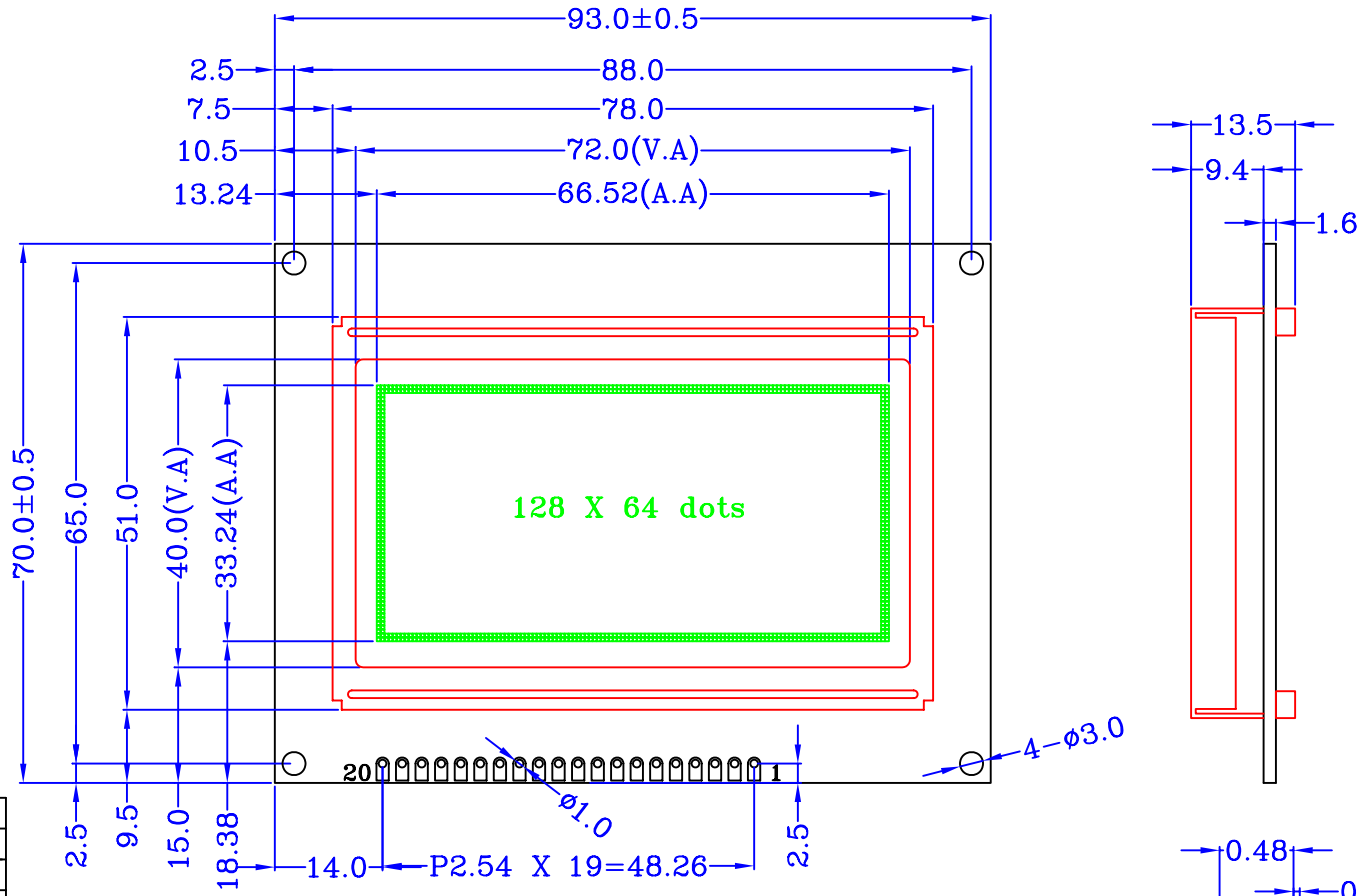

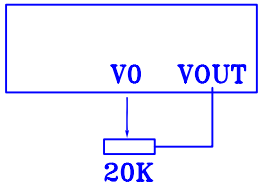

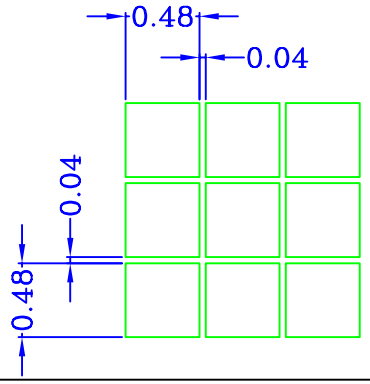

1	VSS	Power ground
2	VDD	Power supply (+5V)
3	V0	Contrast adjust
4	RS(CS)	Register select (Parallel mode); Chip select (Serial mode)
5	R/W(SID)	H: Read; L: Write (Parallel mode); Serial data input (Serial mode)
6	E(SCLK)	Enable signal (Parallel mode); Serial clock (Serial mode)
7	DB0	DATA BUS 0 (Not used in serial mode)
8	DB1	DATA BUS 1 (Not used in serial mode)
9	DB2	DATA BUS 2 (Not used in serial mode)
10	DB3	DATA BUS 3 (Not used in serial mode)
11	DB4	DATA BUS 4 (Not used in serial mode)
12	DB5	DATA BUS 5 (Not used in serial mode)
13	DB6	DATA BUS 6 (Not used in serial mode)
14	DB7	DATA BUS 7 (Not used in serial mode)
15	PSB	H: Parallel mode; L: Serial mode
16	NC	No connection
17	/RES	Reset signal
18	VOUT	Internal booster voltage output
19	A	Backlight (+) +5V
20	K	Backlight (−)

NOTES:

1. DISPLAY TYPE: STN,BLUE
2. POLARIZER TYPE: TRANSMISSIVE,NEGATIVE
3. VIEW DIRECTION: 6:00
4. OPREATING TEMPERATURE: −20°C~+70°C
5. STORAGE TEMPERATURE: −30°C~+80°C
6. VDD: +5V
7. DRIVE METHOD: 1/64DUTY,1/9BIAS
8. CONTROLLER: ST7920
9. BACKLIGHT TYPE: WHITE
10. BACKLIGHT SUPPLY VOLTAGE: +5.0V
11. Default mode: Parallel mode.

WAYING (HONGKONG) SHARES LIMITED

DESIGN:	MODEL NUMBER: WYM12864F2	UNITS: MM
CHECK:		VERSION: A
APPOVE:		SHEET: 1 OF 1
Unspecified tolerences are ±0.3		DATE: 2005-06-08